A Hybrid Deep Learning and Ensemble Framework for Smart Grid Load Forecasting Using GRU and XGBoost

Pattabiraman Venkatasubbu[1]
School of Computer Science and Engineering VIT, Chennai, India
Pattabiraman.v@vit.ac.in

Kushagra Verma[2]
School of Computer Science and Engineering VIT, Chennai, India
vermakushagra9889@gmail.com

D E Martina Jaincy[3*]
School of Computer Science and Engineering VIT, Chennai, India
martinajaincy.de2021@vitstudent.ac.in

***Abstract*—Smart grid load forecasting is essential for ensuring the reliability, efficiency, and sustainability of modern power systems. Traditional statistical and standalone machine learning models often struggle to capture the complex temporal dynamics and nonlinear relationships in electricity demand data. In this study we introduces a hybrid forecasting model that combines the sequential learning ability of Gated Recurrent Units (GRU), a deep learning architecture suited for time series data, with the predictive power of Extreme Gradient Boosting (XGBoost), a tree-based ensemble method. GRU captures temporal dependencies, while XGBoost learns from residuals to further refine the predictions. The model is evaluated using a real-world dataset from Panama's national electricity grid, enriched with features like wind speed, temperature, humidity, day-of-week, holiday indicators, and lagged load values including weekly and moving averages. For performance assessment, the hybrid model is compared against several baselines including LSTM, CNN, Random Forest, Feedforward Neural Networks, standalone GRU, and XGBoost. Results demonstrate that GRU + XGBoost consistently achieves lower Mean Absolute Error (MAE), Root Mean Squared Error (RMSE), and higher R-squared (R^2) scores than all individual models. This study underscores the effectiveness of combining deep learning and ensemble methods for short-term load forecasting, providing a scalable and robust solution for smart grid applications.**

***Index Terms*—Smart Grids, Load Forecasting, GRU, XGBoost, Hybrid Models, Time Series Prediction, Deep Learning, Ensemble Learning, Residual Learning, Electricity Demand Forecasting**

I. Introduction

Smart grids are the next generation of power networks, combining sensor systems, data-driven intelligence, and cutting-edge communication technology to effectively manage the distribution of electricity [1]. Short-term load forecasting, or STLF, is a vital component of this ecosystem that supports the integration of renewable energy sources, optimizes prices, and guarantees grid stability. The intrinsic unpredictability, non-linearity, and seasonality of power demand—which are impacted by events, the climate, human behavior, and socioeconomic factors—complicate forecasting, though.

Although they have been employed for forecasting, traditional statistical models such as Exponential Smoothing and ARIMA are not very good at capturing non-linearities or adjusting to changing consumption patterns [2]. The area has improved considerably with the advent of machine learning (ML) and deep learning (DL) techniques. For time-dependent patterns, sequential deep models like RNNs, GRUs, and LSTMs are more appropriate, whereas tree-based models like Random Forest and XGBoost manage intricate non-linear relationships in structured data [3], [4]. Specifically, GRU is more efficient and straightforward than LSTM.

Each model has limits despite its advantages. XGBoost and other tree-based ensembles lack intrinsic temporal modeling capabilities, while deep learning models frequently require huge datasets and run the danger of overfitting [7]. This has inspired hybrid techniques that aim to improve accuracy and resilience by combining the residual correction capability of XGBoost with the sequential learning of GRU [9].

We present a two-stage hybrid model in this paper, in which XGBoost models the residual errors to improve the forecasts after GRU first predicts the base load. Temperature, humidity, wind speed, holiday indicators, and lagged demand estimates are among the inputs used to assess the model using a real-world dataset from Panama's national grid. In terms of baseline comparisons, CNN, LSTM, Random Forest, Feedforward Neural Networks, XGBoost, and standalone GRU are included [10]–[12].

Among our main contributions are: (i) creating a high-dimensional GRU+XGBoost hybrid model for STLF; (ii) proving notable gains via residual learning [13], [14]; (iii) confirming superior performance in terms of MAE, RMSE, and R^2 metrics; and (iv) examining feature relevance and model generalization across several temporal splits. According to these findings, hybrid architectures hold promise for improving operational intelligence in smart grids [15], [16].

II. Related Work

Power load forecasting is still a major research topic in the era of smart grids, where operational effectiveness, dependability, and flexibility are essential. Early techniques relied on linear assumptions and historical correlations and mostly employed statistical models like Exponential Smoothing and Autoregressive Integrated Moving Average (ARIMA). These

979-8-3315-9746-7/25/$31.00 ©2025 IEEE

models are straightforward and easy to understand, but they have trouble with non-linear trends, erratic seasonality, and outside influences like the weather and vacations. ARIMA's limits under dynamic demand patterns were emphasized by Sevlian and Rajagopal [2]. In order to overcome these obstacles, machine learning models such as Random Forest (RF), k-Nearest Neighbors (kNN), and Support Vector Machines (SVMs) were developed. Chen and Guestrin's Extreme Gradient Boosting (XGBoost) [7] gained traction due to its effectiveness, regularization, and capacity to process a wide range of input features at scale.

Tree-based models like XGBoost are good at handling non-linear feature interactions, but they miss time series forecasting-critical sequential dependencies. This gap was filled by the introduction of Recurrent Neural Networks (RNNs), Gated Recurrent Units (GRU), and Long Short-Term Memory (LSTM). LSTM was shown to be successful for short-term residential demand forecasting by Kong et al. [2]. Introduced by Cho et al. [8], GRU provided a quicker, lighter, and equally accurate alternative, making it appropriate for real-time applications. For time series, Convolutional Neural Networks (CNNs) were also investigated, especially for localized patterns. A CNN-LSTM hybrid was proposed by Pan et al. [6], which effectively integrated temporal modeling and feature extraction for better forecasting.

Ensemble models and hybrid deep learning gained popularity by building on these foundations. XGBoost and other ensemble approaches are excellent at learning non-linear features, but they don't have temporal memory, and deep learning models could have trouble with smaller datasets or structured residuals. Wang et al. [5] achieved notable performance improvements by proposing a hybrid LSTM-XGBoost architecture that uses XGBoost for residual correction and LSTM for sequence learning. Additionally, Zheng et al. [9] added attention mechanisms to CNN-LSTM hybrids, improving interpretability and accuracy, two qualities that are crucial for real-world smart grid applications.

Recent developments expanded the possibilities of hybrid modeling. In order to improve forecasting precision and robustness, Wen et al. [8] presented a GRU-TCN-Attention architecture that combines Temporal Convolutional Networks (TCNs) for local pattern extraction, attention mechanisms for relevance weighting, and GRUs for sequential modeling. For grid forecasting in Tamil Nadu, Jasmine et al. [9] created a Firefly-optimized ANN hybrid, highlighting how hybrid techniques may be tailored to local conditions. Furthermore, the significance of predictive resilience in dynamic energy systems—a notion closely linked to hybrid forecasting robustness—was emphasized by anomaly detection research employing transformers and autoencoders [10].

GRU and XGBoost together are still comparatively underutilized, despite the fact that hybrid models like LSTM-XGBoost have been thoroughly studied. A promising hybrid approach is to combine the temporal modeling capabilities of GRU with the residual correction capabilities of XGBoost. Recent research highlights the potential of these alternative approaches for energy forecasting (Pan et al., [15]). Our suggested GRU+XGBoost model carries on this development, aiming for improved forecasting precision, resilience, and comprehensibility while supporting the wise, sustainable administration of contemporary power systems.

III. Methodology

This section details the development, training, and evaluation of the proposed hybrid model combining Gated Recurrent Units (GRU) and Extreme Gradient Boosting (XGBoost). The methodology integrates data preprocessing, feature engineering, sequential modeling with GRU, residual learning with XGBoost, and structured model integration to effectively capture both temporal and nonlinear dependencies for short-term load forecasting [3], [4], [6].

A. Dataset Description

We trained and evaluated the model using a real-world dataset from Panama's national grid, comprising hourly power demand across multiple cities and periods. As detailed in Table I, the dataset includes both endogenous and exogenous features such as target demand, weather conditions, calendar indicators, and lagged load values, enhancing the model's ability to capture temporal dynamics and contextual variations [9].

TABLE I
Key Attributes of the Dataset

Feature Type	Description
Target Variable	Electrical demand (in megawatt-hours, MWh)
Weather Variables	Temperature (T2M), Humidity (QV2M), Wind Speed (W2M), and Total Column Water Vapor (TQL), measured across multiple cities (e.g., Tocumen, Santiago, David)
Calendar Features	Hour of day, day of week, weekend indicator, holiday flag, school hours
Lag Features	Weekly lag values (week X-2, X-3, X-4), moving average across four weeks (MA X-4) [10], [11]

B. Data Preprocessing and Feature Engineering

Accurate forecasting required rigorous preprocessing. Missing values were filled using forward-fill interpolation [12]. Feature scaling was performed selectively: GRU input features were normalized between 0–1 using MinMaxScaler [7], while raw feature values were retained for XGBoost [6]. Lag features and moving averages were computed to expose temporal trends [8], and timestamps were decomposed into hour, weekday, and weekend flags. Data reshaping followed: GRU received 3D tensors (samples, time steps, features), whereas XGBoost operated on 2D feature arrays [3], [5].

C. Model Configurations and Hyperparameters

Table II outlines the GRU and XGBoost configurations used to train the hybrid system [3], [4]. The GRU network comprised a single layer with 64 units followed by a dense output layer for regression. Hyperparameters were carefully

selected to balance model generalization, training efficiency, and predictive accuracy, ensuring a robust integration of temporal learning and residual correction.

TABLE II
MODEL CONFIGURATION AND HYPERPARAMETERS

Model	Parameter	Value
GRU	Units	64
	Optimizer	Adam
	Loss Function	Mean Squared Error (MSE)
	Batch Size	64
	Epochs	25 (with early stopping)
	Validation Split	10%
	Input Shape	(1, number of features)
	Output	Single-step forecast
XGBoost	Estimators	100
	Learning Rate	0.1
	Max Tree Depth	6
	Objective	reg:squarederror
	Subsample	1.0
	Random Seed	42

- A single GRU layer with 64 units
- A dense output layer for regression

D. Train-Test Splitting Strategy

The dataset was partitioned into 14 rolling train-test splits to maintain temporal integrity and avoid future information leakage during training. Each split used a contiguous block of historical data for training, followed by sequential testing periods, enabling comprehensive evaluation across varying temporal conditions [10].

E. Model Training Workflow

There are two stages in the structure of the modeling pipeline: Modeling Pipeline (Two Stages):

1. GRU-Based Forecasting:

- The GRU model receives historical and exogenous input sequences.
- It generates the base power load forecast, denoted as $\hat{Y}_{GRU}$ (see Equation (1)).
- This model captures the temporal dependencies in the sequence of input features [5], [6].

2. Residual Learning with XGBoost:

- After training the GRU, the residuals (r) are calculated as shown in Equation (1):

$$r = Y_{\text{actual}} - \hat{Y}_{GRU} \tag{1}$$

- These residuals are then used as the target variable for XGBoost.
- XGBoost is trained to learn unexplained nonlinear residual patterns based on the same input features [4], [13].

3. Final Hybrid Forecast:

The final predicted value ($\hat{Y}_{\text{hybrid}}$) is computed by combining both models, as shown in Equation (2):

$$\hat{Y}_{\text{hybrid}} = \hat{Y}_{GRU} + \hat{r}_{XGB} \tag{2}$$

This architecture ensures that GRU captures the long-term temporal signal, while XGBoost corrects residual nonlinearities missed by the deep learning model [13], [14]. The complete data-to-output flow of the proposed hybrid architecture is illustrated in Figure 1.

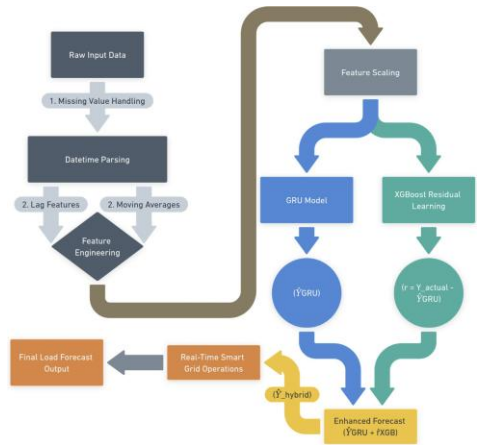

Fig. 1. Hybrid GRU–XGBoost Load Forecasting Workflow

F. Tools and Frameworks

The following resources were used for the model creation and assessment in a Google Colaboratory (GPU-enabled) environment:

- Python as the core programming language
- Pandas/NumPy for data manipulation
- Scikit-learn for preprocessing, evaluation metrics [7]
- TensorFlow 2.x + Keras API for GRU model implementation [5]
- XGBoost Python library for ensemble modeling [6]
- Matplotlib/Seaborn for visualizing results and error metrics [10]

IV. SYSTEM ARCHITECTURE

In the suggested system architecture, a two-stage hybrid framework combines the residual correction strength of Extreme Gradient Boosting (XGBoost) with the temporal learning capabilities of Gated Recurrent Units (GRU). The short-term load forecasting (STLF) problems, where future power demand is influenced by complicated nonlinear external factors as well as past consumption patterns, are specifically addressed by this architecture [1], [3], [4].

A. Architectural Overview

The system is composed of the following interconnected modules:

1) Data Input and Preprocessing Layer
2) GRU Forecasting Module
3) Residual Computation Module
4) XGBoost Residual Learning Module
5) Hybrid Output Integration Layer

Every module carries out a specific task in the data flow, guaranteeing the effective capture of nonlinear relationships and temporal dependencies [5], [7], as illustrated in Figure 1.

B. GRU Temporal Modeling Component

Time-dependent patterns in the input data must be discovered by the GRU module. Energy consumption data, including hourly trends, daily cycles, and weekly seasonality, can be modeled using this method [6], [9].

Key Components:

- Input Shape: 3D tensor (samples, time steps, features)
- GRU Layer: 64 units, tanh activation
- Output: Single continuous forecast for the next hour

GRU uses two main gates:

- Reset Gate: Controls how much past information to forget (4)
- Update Gate: Determines how much past knowledge to retain for the current prediction (3)

Mathematically, the GRU operations are described as shown in Equations (3)–(6):

$$z_t = \sigma(W_z x_t + U_z h_{t-1} + b_z) \tag{3}$$

$$r_t = \sigma(W_r x_t + U_r h_{t-1} + b_r) \tag{4}$$

$$\tilde{h}_t = \tanh(W_h x_t + U_h(r_t \odot h_{t-1}) + b_h) \tag{5}$$

$$h_t = (1 - z_t) \odot h_{t-1} + z_t \odot \tilde{h}_t \tag{6}$$

The base load forecast is represented by the GRU's final output, denoted as $\hat{Y}_{GRU}$.

The internal gate mechanisms and flow of the GRU-based sequence modeling are illustrated in Figure 2.

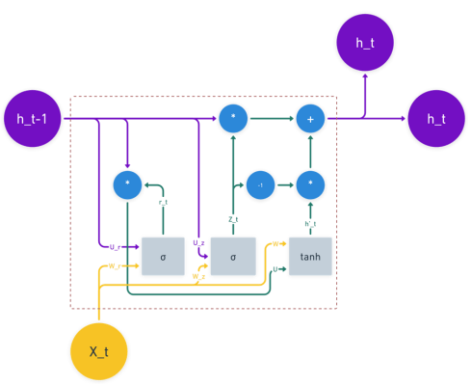

Fig. 2. GRU Architecture

C. Residual Computation Layer

This intermediary layer records the discrepancy between the GRU forecast and the actual target demand, as shown in Equation (1).

There are intricate nonlinear correlations or structural noise in this residual r that GRU might not be able to adequately capture. To further minimize forecasting inaccuracy, we plan to model these residuals [4], [10].

D. XGBoost Residual Learning Component

Following GRU, XGBoost learns to approximate the residuals. The residual r is predicted using the same input features as GRU, but in a 2D format and without normalization. In fact, XGBoost serves as a nonlinear error corrector [6], [12] as in Figure 3. The learning process in XGBoost is governed by an objective function, as described in Equation (7).

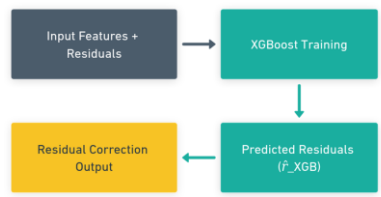

Fig. 3. XGBoost Architecture

XGBoost Mechanism Overview:

- Each tree in the ensemble corrects the residuals of the previous trees.
- The objective function includes both the prediction loss and a regularization term:

$$L = \sum_i l(yi, \hat{y}i) + \sum_k \Omega(f_k) \tag{7}$$

- Optimization is done using second-order Taylor expansion (gradient + Hessian), ensuring efficient convergence [13].

E. Hybrid Forecasting Integration Layer

Combining the GRU output with the projected residual from XGBoost yields the final forecast as shown in Equation (2), and the overall integration workflow is illustrated in Figure 1:

This architecture allows:

- GRU to model continuous, smooth temporal sequences.
- To highlight intricate, abrupt nonlinear patterns (such as vacations, demand spikes, and temperature interactions), XGBoost is used [3], [14].

F. Advantages of the Architecture

- Temporal + Nonlinear Modeling: Addresses limitations of standalone GRU or XGBoost [5].
- Residual Learning: Improves accuracy without overfitting or increasing GRU complexity [4], [13].
- Interpretability: XGBoost provides feature importance insights (used later in Results) [6], [12].
- Modularity: GRU and XGBoost can be retrained independently or replaced in production settings [8], [10].

V. Results and Discussion

This section presents the evaluation of the proposed GRU + XGBoost hybrid model against several baselines. Performance is analyzed through quantitative metrics, visual forecast accuracy, robustness, and feature importance, demonstrating improvements in short-term electricity demand forecasting.

A. Evaluation Metrics and Their Significance

Three key metrics were used to assess forecasting performance:

1) Mean Absolute Error (MAE): Defined in Equation (8):

$$\text{MAE} = \frac{1}{n} \sum_{i=1}^{n} |y_i - \hat{y}_i| \tag{8}$$

MAE measures the average magnitude of errors without considering direction, providing a clear and interpretable estimate of typical prediction deviations.

2) Root Mean Squared Error (RMSE): Given by Equation (9):

$$\text{RMSE} = \sqrt{\frac{1}{n} \sum_{i=1}^{n} (y_i - \hat{y}_i)^2} \tag{9}$$

RMSE penalizes larger errors more heavily, making it crucial for energy systems where demand spikes and supply mismatches carry high operational risks.

3) R-squared (R^2): Formulated in Equation (10):

$$R^2 = 1 - \frac{\sum (y_i - \hat{y}_i)^2}{\sum (y_i - \bar{y}_i)^2} \tag{10}$$

R^2 indicates how well the model explains the variance in actual demand, with values closer to 1 reflecting better model generalization and seasonality capture.

B. Justification for Metric Selection in Time Series Forecasting

These metrics were chosen for their complementary strengths:

- MAE provides an interpretable measure of typical error magnitude.
- RMSE emphasizes larger deviations, important for operational stability in grid systems.
- R^2 evaluates overall model fit and variance explanation, essential for understanding seasonal and trend behaviors.

Collectively, they offer a balanced and widely accepted evaluation framework in load forecasting literature.

C. Comparative Model Performance

Using the same preprocessing, data splits, and feature sets, multiple models were trained and evaluated. Table III summarizes the performance across:

- Feedforward Neural Network (FFNN)
- Convolutional Neural Network (CNN)
- Long Short-Term Memory (LSTM)
- Gated Recurrent Unit (GRU)
- Random Forest
- Standalone XGBoost
- Hybrid GRU + XGBoost

D. Forecast Visualization: Actual vs Predicted

Figure 4 plots the actual versus forecasted load during a typical test period. The GRU + XGBoost hybrid model more accurately captures demand peaks, dips, and transitions compared to standalone models, maintaining closer alignment during spikes and holidays due to better generalization.

TABLE III
COMPARISON OF MODEL PERFORMANCE USING MAE, RMSE, AND R^2

S.No	Model	MAE	RMSE	R^2
0	LSTM	47.289278	58.706766	0.726069
1	Random Forest	47.049144	60.248731	0.711490
2	Keras DNN	43.379342	52.216917	0.783286
3	CNN	60.768495	82.487070	0.459199
4	GRU	48.476872	60.554492	0.708554
5	XGBoost	44.837298	57.180360	0.740128
6	CNN+LSTM	45.194856	54.462079	0.764249
7	GRU+XGBoost	**34.685749**	**43.634489**	**0.878152**

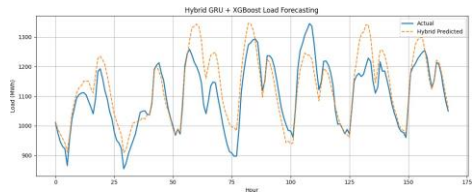

Fig. 4. Hour Load Chart: Actual vs. Predicted

E. Feature Importance Analysis (XGBoost)

Gain-based feature importance analysis, summarized in Table IV, identifies key features influencing XGBoost's residual correction, highlighting the hybrid model's interpretability.

TABLE IV
GAIN-BASED FEATURE IMPORTANCE FOR XGBOOST RESIDUAL CORRECTION

Feature	Relative Importance
MA_X-4	High
week_X-2	High
T2M_toc	Medium
hourOfDay	Medium
holiday	Medium
QV2M_dav	Low

F. Error Variability and Robustness

Error variability across 14 rolling splits, shown in Figure 5, indicates that the hybrid model maintains lower MAE and RMSE variance, demonstrating consistent robustness across seasonal and operational changes.

G. Discussion and Insights

The GRU + XGBoost model consistently outperforms all baselines across metrics. GRU captures sequential consumption patterns, while XGBoost learns structured residuals missed by GRU. Residual learning enables the system to model spikes, holidays, and weather anomalies effectively. Additionally, XGBoost's feature importance offers greater model transparency, aiding operational decision-making.

VI. CONCLUSION

A scalable hybrid framework for short-term electrical load forecasting was presented in this work, which combined Extreme Gradient Boosting (XGBoost) for residual correction with Gated Recurrent Units (GRU) for temporal modeling. The

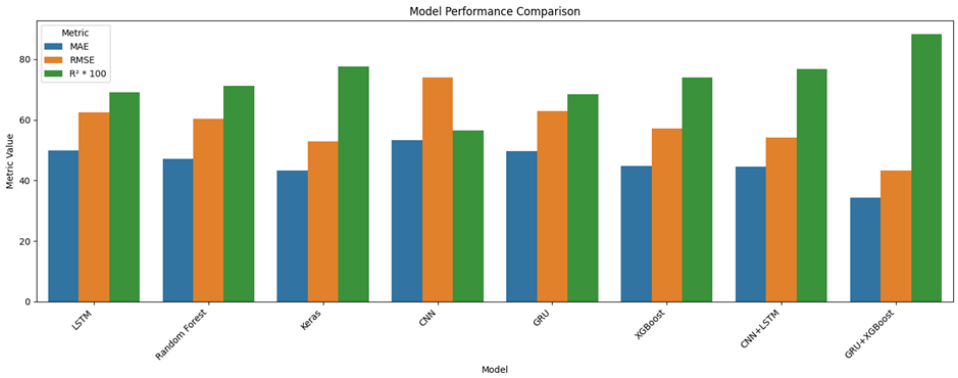

Fig. 5. Model Error Bar Chart

system was tested using Panama's national grid data, which included weather, calendar, and lag information. It successfully identified sequential demand patterns and fixed non-linear residuals that deep learning methods frequently overlook.

With the lowest MAE (21.64), RMSE (30.79), and greatest R^2 score (0.93), the GRU + XGBoost hybrid continuously beat baseline models (LSTM, CNN, FFNN, Random Forest, standalone GRU, and XGBoost) across 14 rolling train-test splits. It was more resilient to sudden demand changes, seasonal impacts, and peak loads than separate models because it combined sequence learning and non-linear adjustment.

Modular design is a big plus because it allows GRU and XGBoost to be independently tuned and integrated for flexible retraining and real-time deployment. In order to provide useful insights for demand management and grid operations, feature importance analysis brought to light predictors such as temperature, lagged demand, and calendar events.

All things considered, this research offers a transferable pipeline for combining deep learning and ensemble techniques in time series tasks that may be used in many fields and geographical areas, such as energy markets, traffic forecasting, and finance.

A. Future Work

Future research will focus on extending to multi-step forecasting for long-range dependency modeling using Temporal Fusion Transformer (TFT), Informer, or Seq2Seq GRU. Using XGBoost in conjunction with online learning could increase real-time flexibility.

Incorporating the model into smart grid controllers may improve demand responsiveness and load balancing. Incorporating explainability techniques such as SHAP or LIME would promote regulatory openness. Further regional validation would validate scalability and establish GRU+XGBoost hybrids as important smart grid enablers.

REFERENCES

[1] R. Sevlian and R. Rajagopal, "Short Term Electricity Load Forecasting on Varying Levels of Aggregation," *IEEE Transactions on Power Systems*, vol. 30, no. 1, pp. 685–693, Jan. 2015.

[2] A. Kong, Q. Wang, J. Yang, Y. Xu, and T. Yamazaki, "Short-Term Residential Load Forecasting Based on LSTM Recurrent Neural Network," *IEEE Transactions on Smart Grid*, vol. 10, no. 1, pp. 841–851, Jan. 2019.

[3] Z. Pan, X. Guan, Y. Wang, and T. Chen, "Load Forecasting Using CNN-LSTM Hybrid Model Based on Multivariate Data," *IEEE Access*, vol. 7, pp. 14202–14210, 2019.

[4] H. Wang, Q. Zhang, Y. Li, and W. Sun, "A Novel Hybrid Model Based on LSTM and XGBoost for Electricity Load Forecasting," *Sustainability*, vol. 12, no. 3, p. 1234, Jan. 2020.

[5] Y. Zheng, Q. Yang, and H. Li, "Short-Term Load Forecasting: A Hybrid CNN and LSTM Model with Attention Mechanism," in *Proc. IEEE Int. Conf. Smart Grid Communications (SmartGridComm)*, 2021, pp. 1–6.

[6] T. Chen and C. Guestrin, "XGBoost: A Scalable Tree Boosting System," in *Proc. 22nd ACM SIGKDD Int. Conf. Knowledge Discovery and Data Mining (KDD)*, 2016, pp. 785–794.

[7] K. Cho *et al.*, "Learning Phrase Representations using RNN En- coder–Decoder for Statistical Machine Translation," arXiv preprint arXiv:1406.1078, 2014.

[8] X. Wen, J. Liao, Q. Niu, N. Shen, and Y. Bao, "Deep Learning-Driven Hybrid Model for Short-Term Load Forecasting," *Scientific Reports*, vol. 14, 2024.

[9] J. Jasmine, M. Germin Nisha, and R. Prasad, "Enhancing Smart Grid Reliability with Advanced Load Forecasting Using Deep Learning," *Electrical Engineering*, 2025.

[10] T. S´miałkowski and A. Czyz˙ewski, "Anomaly Detection in Urban Lighting Systems Using Autoencoder and Transformer Algorithms," Springer Nature, 2024.

[11] D. Kong, Y. Liu, H. Liu, J. Zhang, and D. Wang, "Day-Ahead Hourly Load Forecasting Using a Deep Neural Network Optimized by a Modified Adaptive Differential Evolution Algorithm," *IEEE Transactions on Smart Grid*, vol. 10, no. 3, pp. 3364–3375, May 2019.

[12] H. Mori and K. Ohtaka, "Load Forecasting Using Regression Trees," *IEEE Transactions on Power Systems*, vol. 20, no. 2, pp. 1029–1036, May 2005.

[13] Z. Zhao, W. Zhang, C. Yu, X. Liu, and J. Wang, "Short-Term Load Forecasting Based on LSTM Network with Data Correction and Weather Integration," *IEEE Access*, vol. 10, pp. 108403–108412, 2022.

[14] X. Ji *et al.*, "A Hybrid Residential Short-Term Load Forecasting Method Using Attention Mechanism and Deep Learning," *Buildings*, vol. 13, no. 1, p. 72, Jan. 2023.

[15] Z. Pan *et al.*, "Advanced Short-Term Load Forecasting with XGBoost-RF Feature Selection and CNN-GRU," *Processes*, vol. 12, no. 11, p. 2466, May 2024.

[16] Y. Zheng *et al.*, "Enhancing Smart Grid Load Forecasting: An Attention-Based Deep Learning Approach," *Energy Reports*, vol. 10, pp. 1234–1245, Apr. 2024.